CBRA Modular Component Backwall

BULLOCH FABRICATING INC.

COPYRIGHT BULLOCH FABRICATING , INC 2010, ALL RIGHTS RESERVED.

CBRA Modular Component Backwall

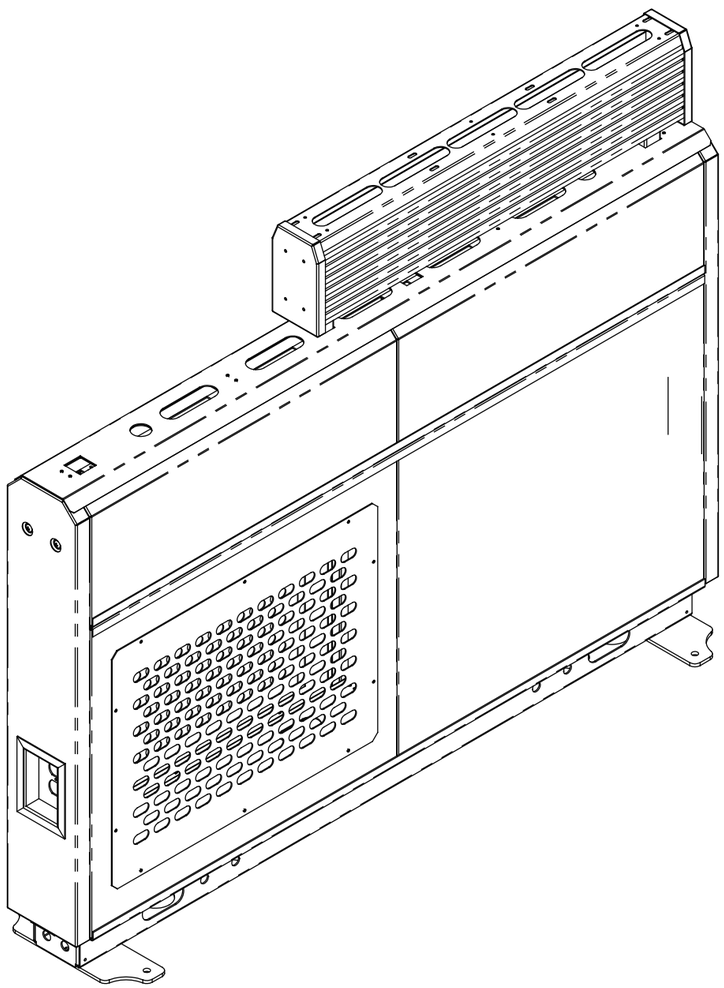

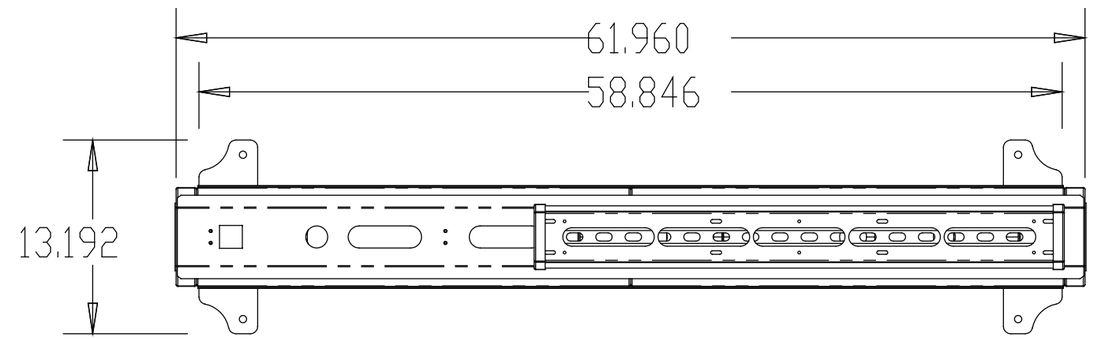

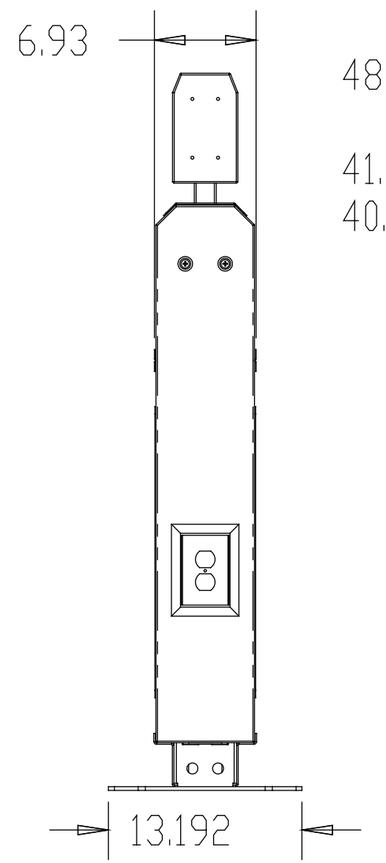

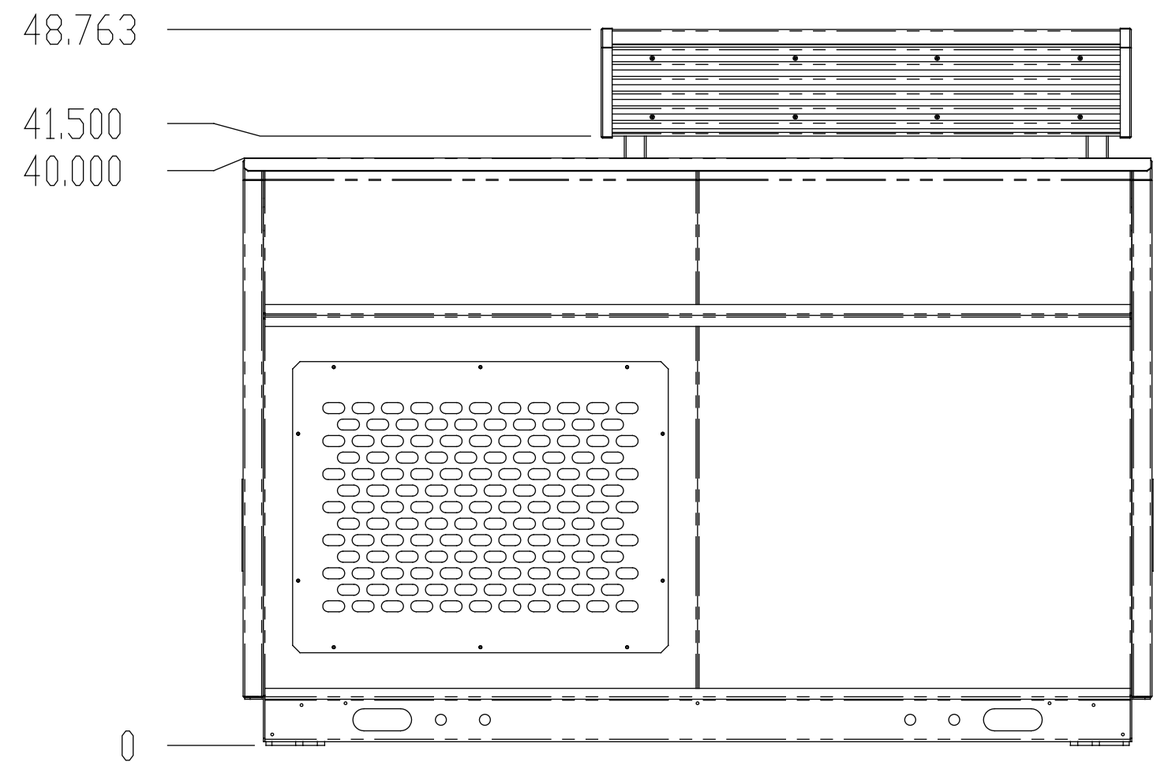

COPYRIGHT BULLOCH FABRICATING , INC 2010, ALL RIGHTS RESERVED.

CBRA Modular Component Backwall

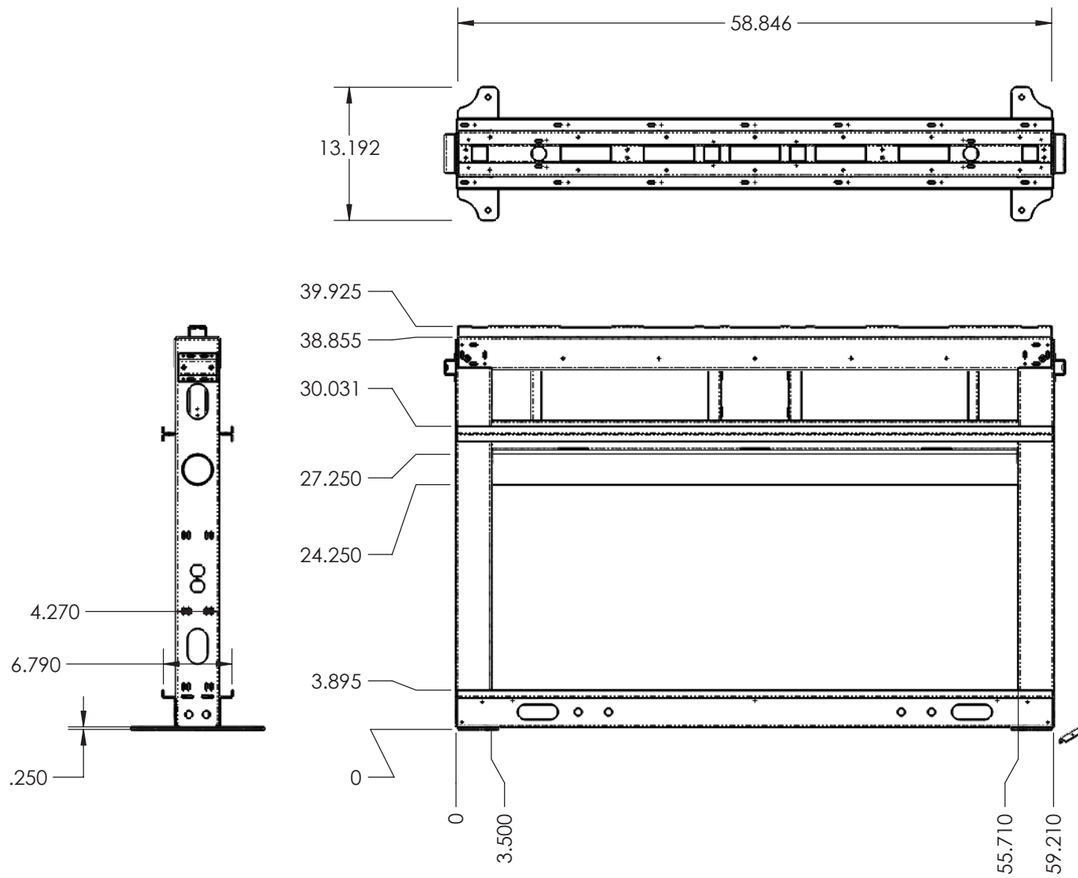

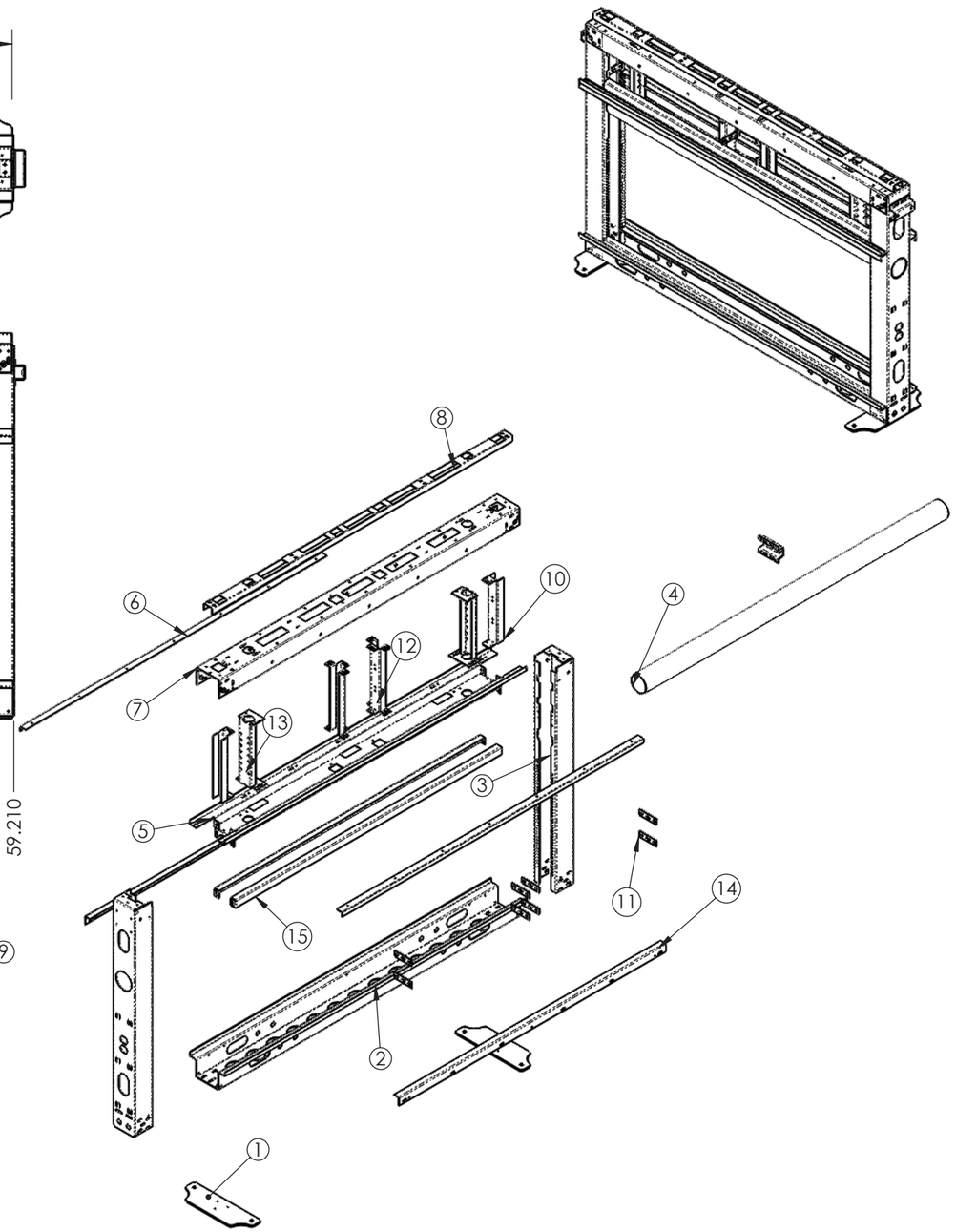

ITEM NO.	PART NUMBER	DESCRIPTION	QTY.
1	21257-01	BASE PLATE	2
2	21257-02	BOTTOM TROUGH CABLE EXIT	1
3	21257-03	INTERNAL FRAME UPRIGHT	2
4	20969-06	TORQUE TUBE	1
5	21257-05	FIXED CABLE SHELF	1
6	20969-09		2
7	21257-04	FRAME CAP	1
8	21257-07		1
9	21257-17		2
10	20969-38		2
11	20969-37		8
12	20969-36		2
13	21257-35		2
14	21257-45	PANEL SLIDE STABILLIZER	2
15	21257-46		2

WWW.BULLOCHFAB.COM | P: 972-221-6277 | C: 214-620-6075 | F: 972-221-2027 | 450 E. PURNELL ST. LEWISVILLE, TEXAS 75057
COPYRIGHT BULLOCH FABRICATING , INC 2010, ALL RIGHTS RESERVED.